Assembly instruction for ER European rose (DUM)

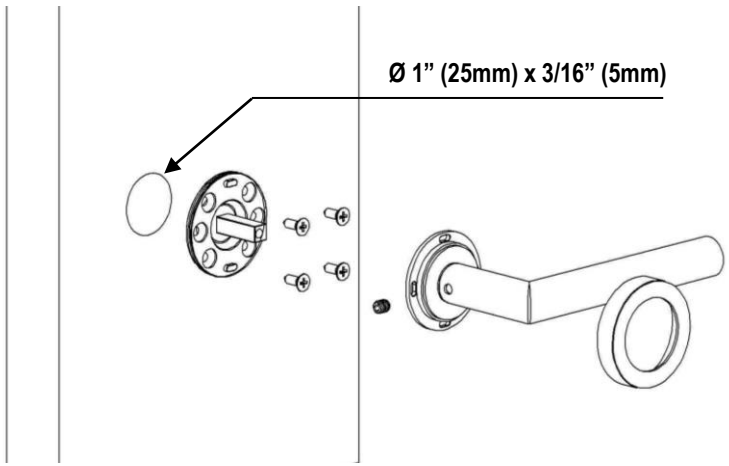

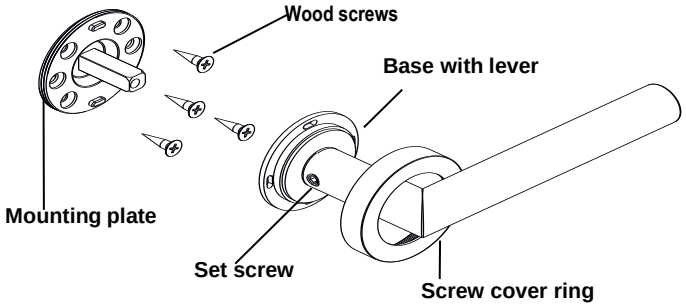

1. Door preparation: The European style Dummy set requires a special door preparation.
Mill a circular cut out in the door with a 1“ (25mm) diameter and a depth of 3/16“ (5mm) on your the desired position.
2.Place the mounting plate in the cut out and fix with suitable screws. Please take care that the spindle is in the correct position, that the set screw can break into the thinnest part of the spindle. According to different models the set screw is placed either on the side or underneath the lever handle

Picture for step 2

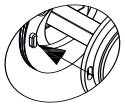

Picture for step 3

3. Place the base plate on the mounting plate so that the fixing lugs of the mounting plate fit in the fixing holes of the base plate.
4.Fix with the screw-on cover ring
5.Tighten the set screws with a hex key ensuring they pierce the spindle
Important: Please ensure that the point of the set screw can break through the thinnest side of the spindle.

KARCHER DESIGN

KARCHER DESIGN NA
235 W. Paul Ave
Clovis, CA 93612-0250
United States of America

Limited Warranty – USA & Canada Only

Karcher Design warrants to the original purchaser and first consumer owner that its products shall be free from defects in material or workmanship for 2 years after purchase.

Subject to the conditions stated below, Karcher Design shall repair or replace (at our sole discretion) any defective product at no further charge.

This warranty is valid only for the original purchaser and first consumer owner and is not transferable.

This warranty *only* applies to products purchased directly from an authorized dealer of Karcher Design products. Our website contains a list of authorized dealers. You may be asked for proof of purchase, so please retain your receipt.

To obtain warranty service, please contact an authorized reseller dealer directly. Do not contact Karcher Design directly with warranty questions.

This warranty does not apply to ordinary wear and tear or to damage caused by conditions beyond Karcher Design's control, including but not limited to accidents, lack of reasonable care, weather conditions, improper installation or maintenance, alteration, or abuse. **In particular, this warranty does not apply to products that are not intended to be used outdoors (including products made out of wood, leather, carbon, glass, laminate, and satin nickel) that are in fact used outdoors.**

THE REMEDIES DESCRIBED ABOVE ARE YOUR SOLE AND EXCLUSIVE REMEDIES, AND CONSTITUTE KARCHER DESIGN'S ENTIRE LIABILITY FOR ANY BREACH OF THIS LIMITED WARRANTY. KARCHER DESIGN EXCLUDES AND EXPRESSLY DISCLAIMS LIABILITY FOR ANY CONSEQUENTIAL, INDIRECT, INCIDENTAL OR SPECIAL DAMAGES OF ANY NATURE ARISING OUT OF THE SALE, INSTALLATION, MAINTENANCE, USE OR FAILURE OF ANY KARCHER DESIGN PRODUCT, INCLUDING BUT NOT LIMITED TO LOSS OF PROFITS, PROPERTY DAMAGE, DAMAGES TO BUSINESS OR BUSINESS RELATIONS OR DAMAGES FOR LOSS OF OPERATION. IN ALL EVENTS KARCHER DESIGN'S LIABILITY WILL BE CAPPED AT THE PURCHASE PRICE PAID FOR THE PRODUCT.

Some states do not allow limitations on how long an implied warranty lasts, so the above limitation may not apply to you. Some states do not allow the exclusion or limitation of incidental or consequential damages, so the above limitation or exclusion may not apply to you. This warranty gives you specific legal rights, and you may also have other rights which vary from state to state.

No representative or employee of Karcher Design is authorized to make any modification or addition to this warranty.

Karcher Design NA, LLC
235 W. Paul Ave
Clovis, CA 93612-0250
Office: 425-440-0708